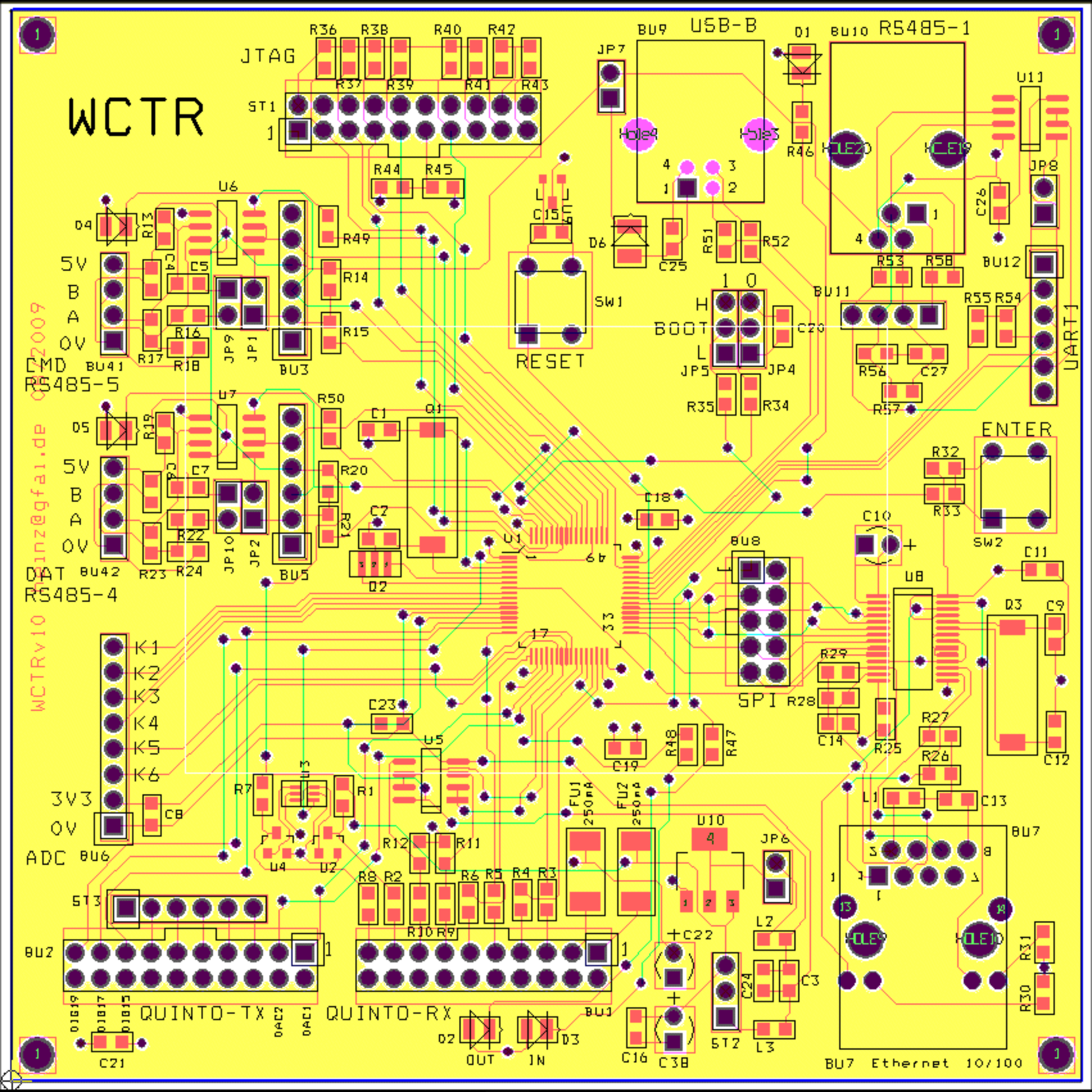
WCTR
JTAG
ST1
USB-B
BU9
RS485-1
BU10
D1
JP7
Hole4
Hole3
R46
HOLE20
HOLE19
U11
JP8
C26
R44
R45
U6
D4
R13
C4
C5
R49
R14
R15
R16
R17
R18
JP9
JP1
BU3
BU41
5V
B
A
0V
CMD
RS485-5
C15
D6
C25
R51
R52
SW1
RESET
H
BOOT
L
JP5
JP4
C20
R53
R58
BU11
R55
R54
BU12
UART1
R56
C27
R57
R35
R34
U7
D5
R19
R50
C1
Q1
C6
C7
R20
R21
C2
Q2
R22
R23
R24
JP10
JP2
BU5
BU42
DAT
RS485-4
ENTER
R32
R33
SW2
C18
C10
U1
BU8
U8
C11
Q3
C9
SPI
R29
R28
C14
R25
R27
R26
C12
C23
U5
C19
R48
R47
K1
K2
K3
K4
K5
K6
3V3
0V
ADC
BU6
C8
R7
U3
R1
U4
U2
R12
R11
FU1
250mA
FU2
250mA
U10
JP6
L1
C13
BU7
R8
R2
R6
R5
R4
R3
R10
R9
ST3
BU2
QUINTO-TX
QUINTO-RX
C22
L2
C24
C3
ST2
L3
C16
C38
BU1
D2
D3
OUT
IN
C21
HOLE9
HOLE10
R31
R30
BU7 Ethernet 10/100
WCTRv10
mainz@gfai.de 03/2009

Spectral Welding Controller (Root) Revised: Tuesday, August 18, 2009
WCTR heinz@gfai.de Revision: 1.0 WCTRv10

Bill Of Materials August 18,2009 9:18:29

Item	Qty	Reference	Part
1	3	ST1,BU1,BU2	ST10x2
2	2	BU5,BU3	BU5x1
3	1	BU6	BU8x1_90°
4	1	BU7	MIC24011-0101
5	1	BU8	ST5x2
6	1	BU9	USB_B
7	1	BU10	RJ10
8	1	BU11	BU4x1
9	1	BU12	BU6x1
10	2	BU42,BU41	BU4x1_90°
11	4	C1,C2,C9,C12	10p
12	12	C3,C4,C6,C8,C13,C16,C18, C19,C20,C21,C23,C26	220n
13	3	C5,C7,C27	33n
14	3	C10,C22,C24	10u
15	3	C11,C15,C25	100n
16	1	C14	10n
17	1	C38	47u
18	5	D1,D2,D3,D4,D5	green
19	1	D6	BAT48
20	2	FU1,FU2	250m
21	7	JP1,JP2,JP6,JP7,JP8,JP9, JP10	ST2x1
22	3	ST2,JP4,JP5	ST3x1
23	3	L1,L2,L3	FB
24	1	Q1	32768Hz
25	1	Q2	CSTCC8M00
26	1	Q3	A250J8C
27	5	R1,R7,R15,R21,R55	2k2
28	2	R2,R8	0
29	4	R3,R4,R5,R6	330
30	3	R9,R10,R32	6k8
31	5	R11,R12,R33,R34,R35	3k3
32	6	R13,R18,R19,R24,R53,R58	56k
33	3	R14,R20,R54	18k
34	3	R16,R22,R56	120
35	3	R17,R23,R57	33k
36	1	R25	2k0
37	4	R26,R27,R28,R29	50
38	7	R30,R31,R46,R47,R48,R49, R50	100
39	10	R36,R37,R38,R39,R40,R41, R42,R43,R44,R45	10k
40	2	R51,R52	22
41	1	ST3	ST6x1
42	2	SW1,SW2	PHAP3301
43	1	U1	STM32F103Rx-LQFP64
44	2	U4,U2	BSS123
45	1	U3	NC7WZU04
46	1	U5	AD8532
47	3	U6,U7,U11	LTC485
48	1	U8	ENC28J60
49	1	U9	MAX809SQ293
50	1	U10	MC33269-3.3T3G

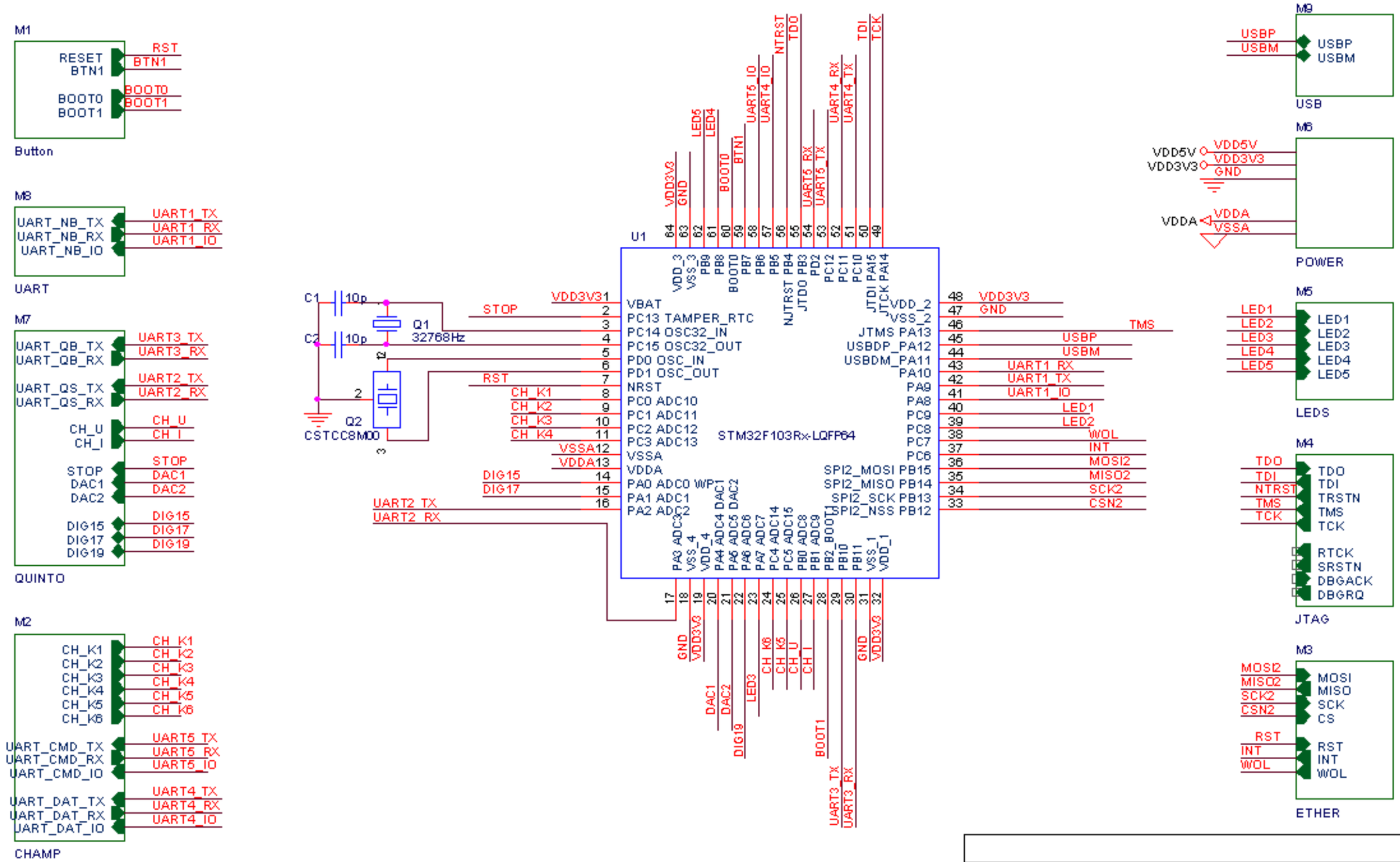

Title	Spectral Welding Controller (Root)	
Size A4	Document Number WCTR heinz@gfai.de	Rev 1.0
Date: Tuesday, August 18, 2009	Sheet 1 of 10	

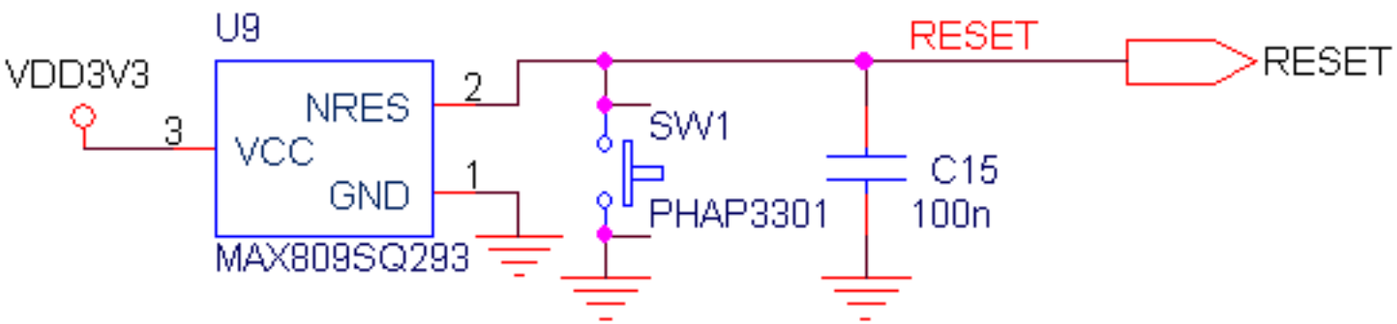

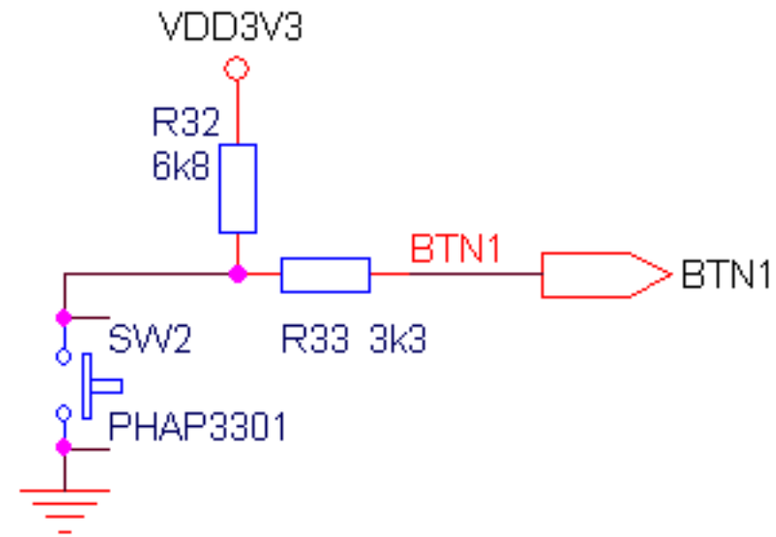

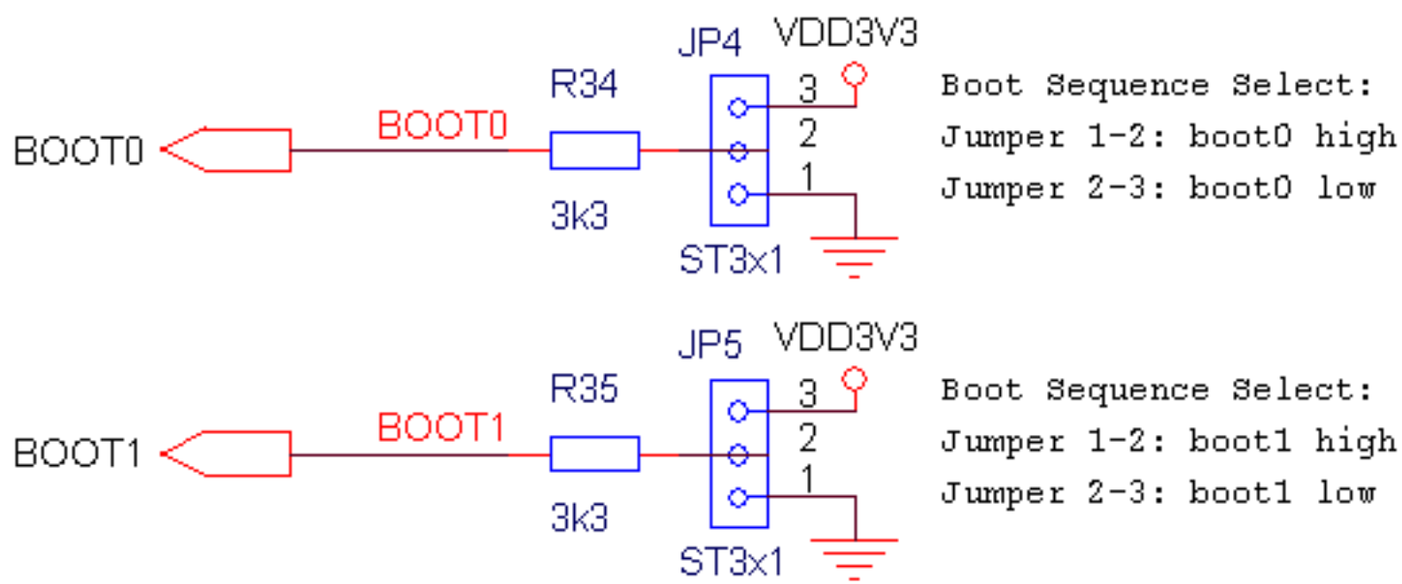

Title	Buttons and Switches	M1	
Size A4	Document Number WCTR heinz@gfai.de		Rev 1.0
Date: Tuesday, August 18, 2009		Sheet 5 of 10	

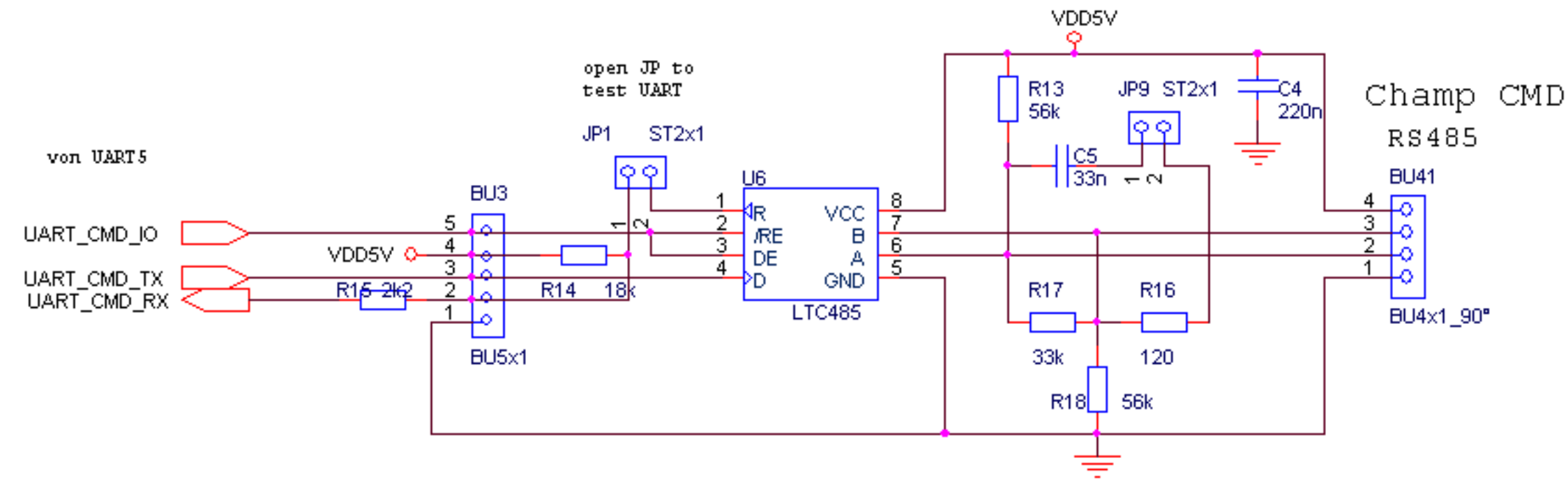

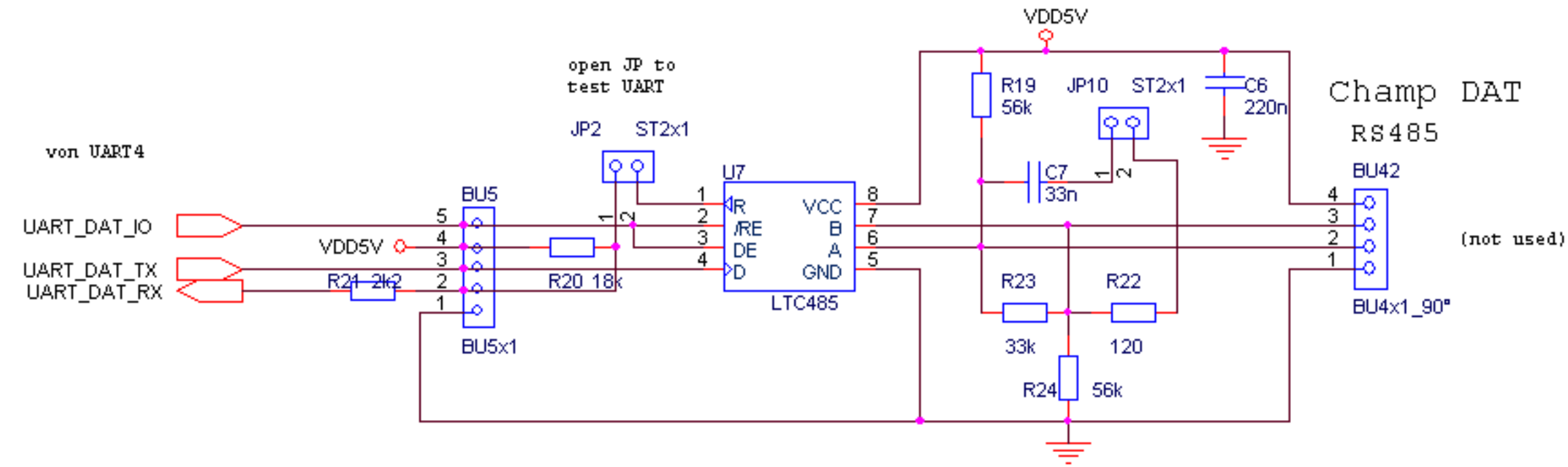

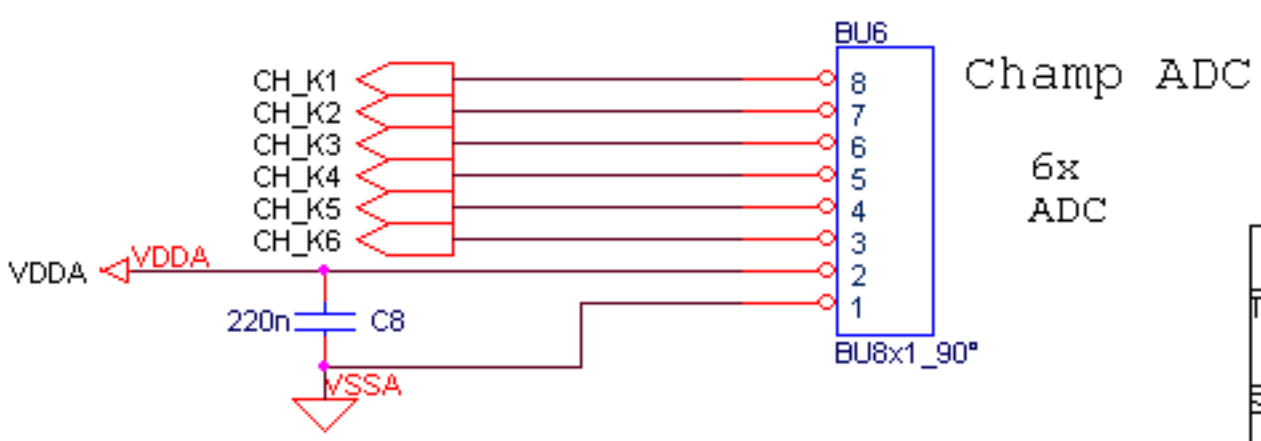

JP9, JP10: Jumper zwischen A-B an Endpoints einsetzen
C5, C7: dynamische Terminierung (stromsparend)
BU41, BU42 und BU6 gehen zum ADAPTERv10

Title	RS485 CHAMP-Interface über Champ-ADAPTER	M2	
Size A4	Document Number WCTRv10		Rev 1.0
Date: Thursday, November 19, 2009	Sheet 3 of 10		

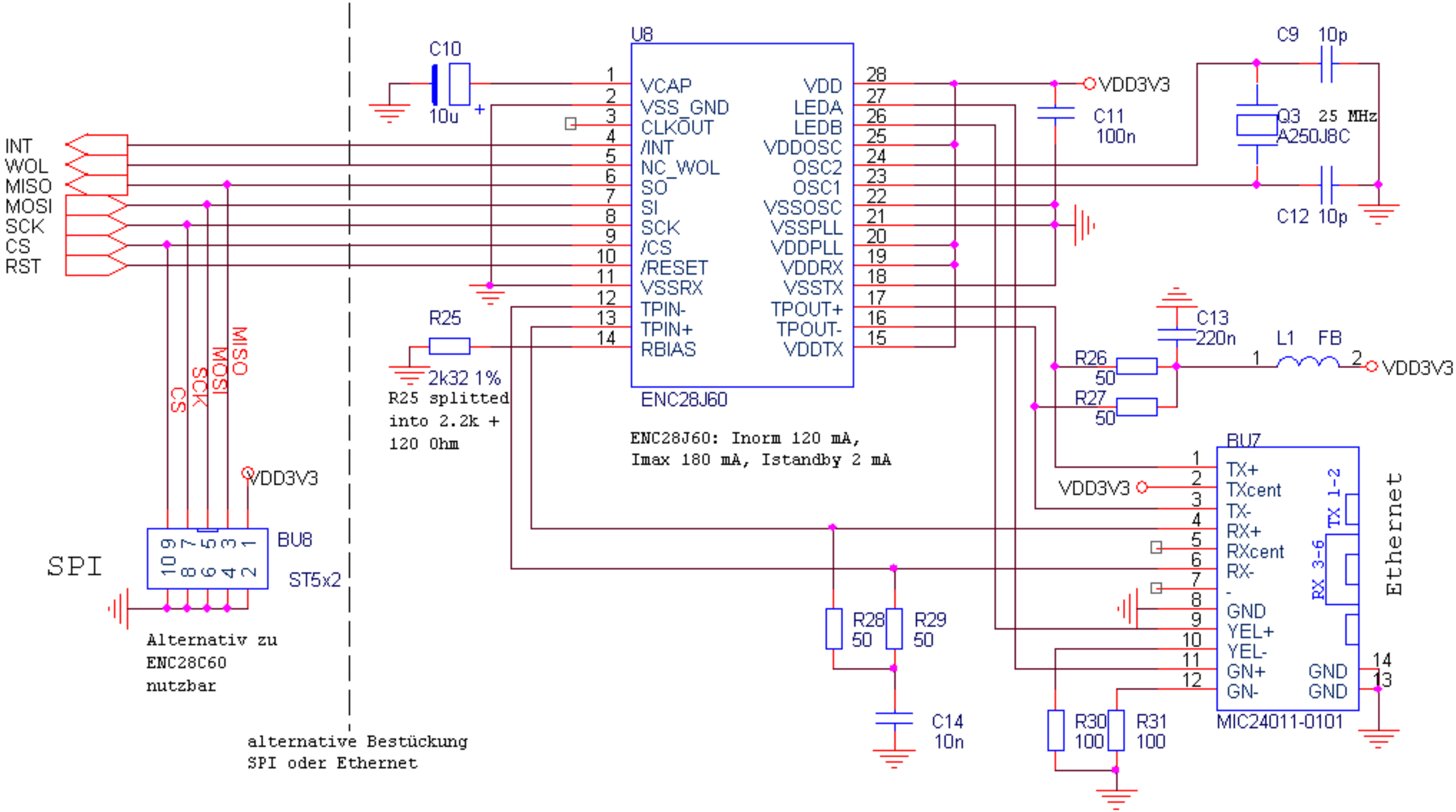

Bug: Pin22 VSSOSC lag auf
VDD3V3, korr. 10/2009

Title	Ethernet & SPI	M3
Size A4	Document Number WCTRv10	Rev 1.0

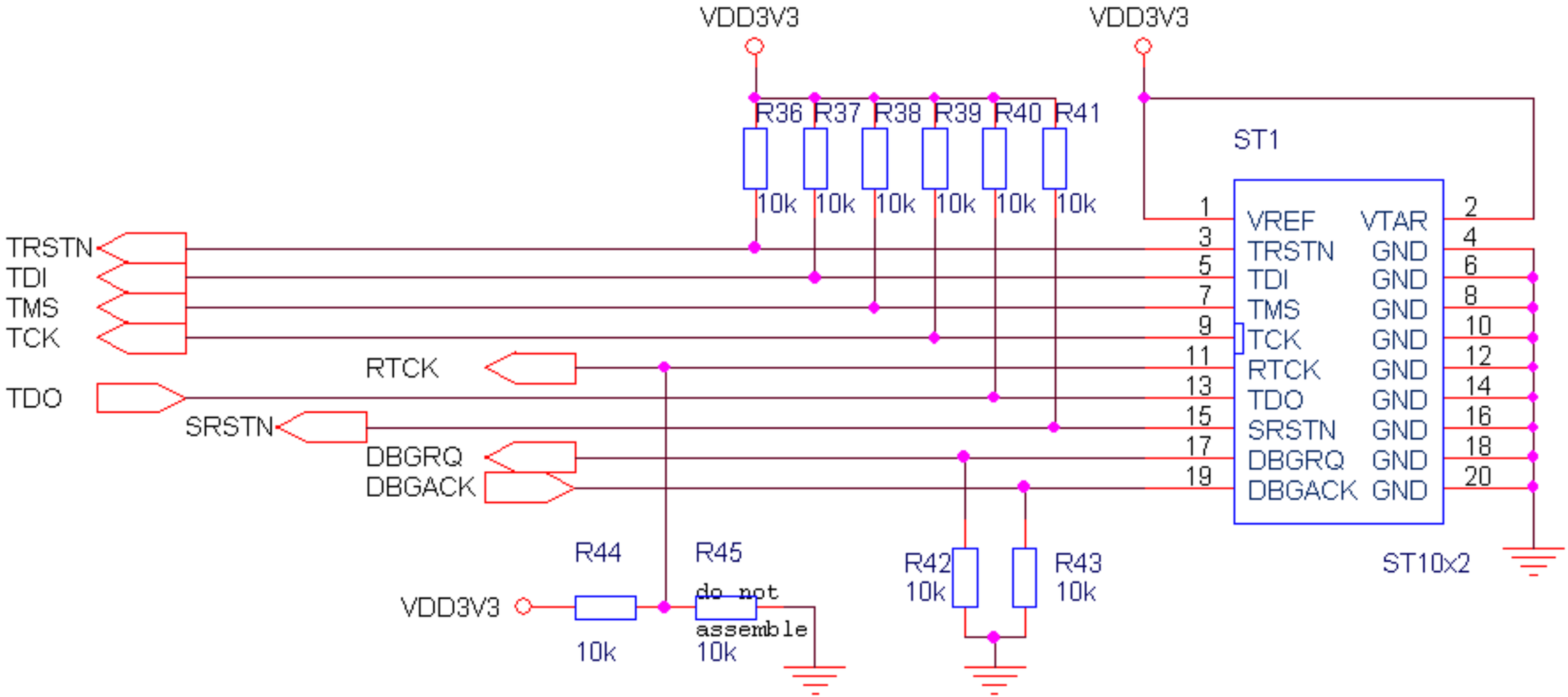

Pin2 VTAR (Targetversorgung)
ist im Amontec Key nicht
verbunden

Title	JTAG ARM-Interface	M4
Size A4	Document Number WCTRv10	Rev 1.0
Date: Tuesday, August 18, 2009	Sheet 6 of 10	

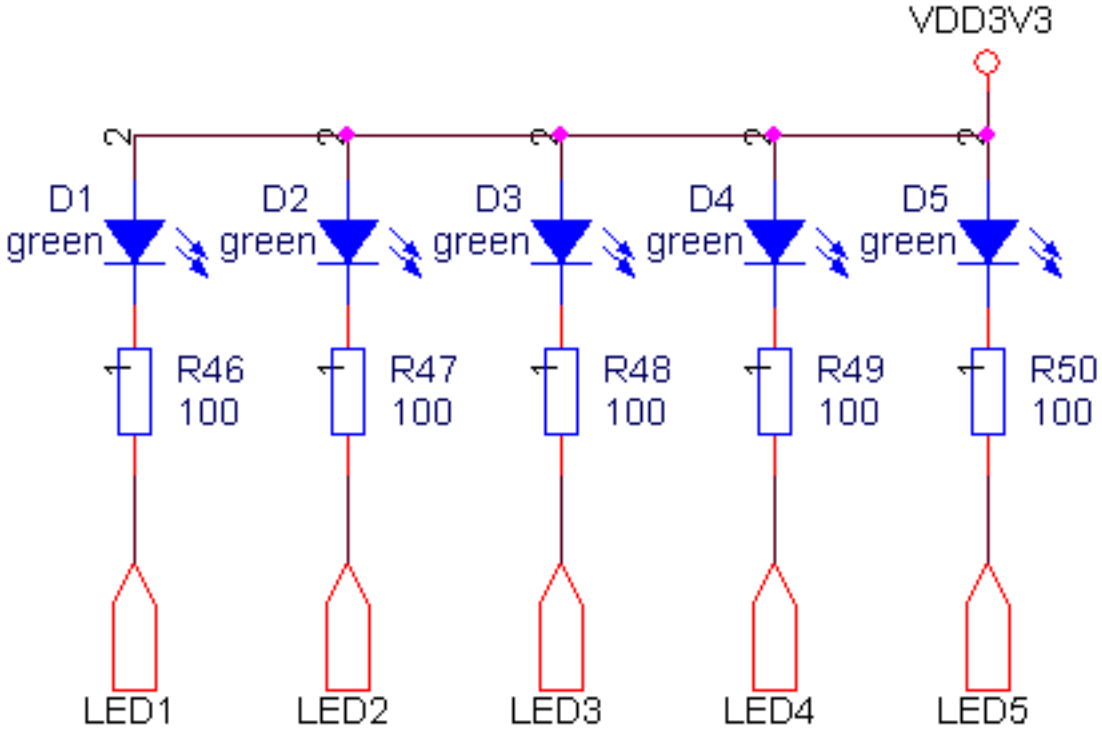

Title	LEDs		
Size A4	Document Number WCTR heinz@gfai.de		Rev 1.0
Date: Tuesday, August 18, 2009		Sheet 8 of 10	

M5

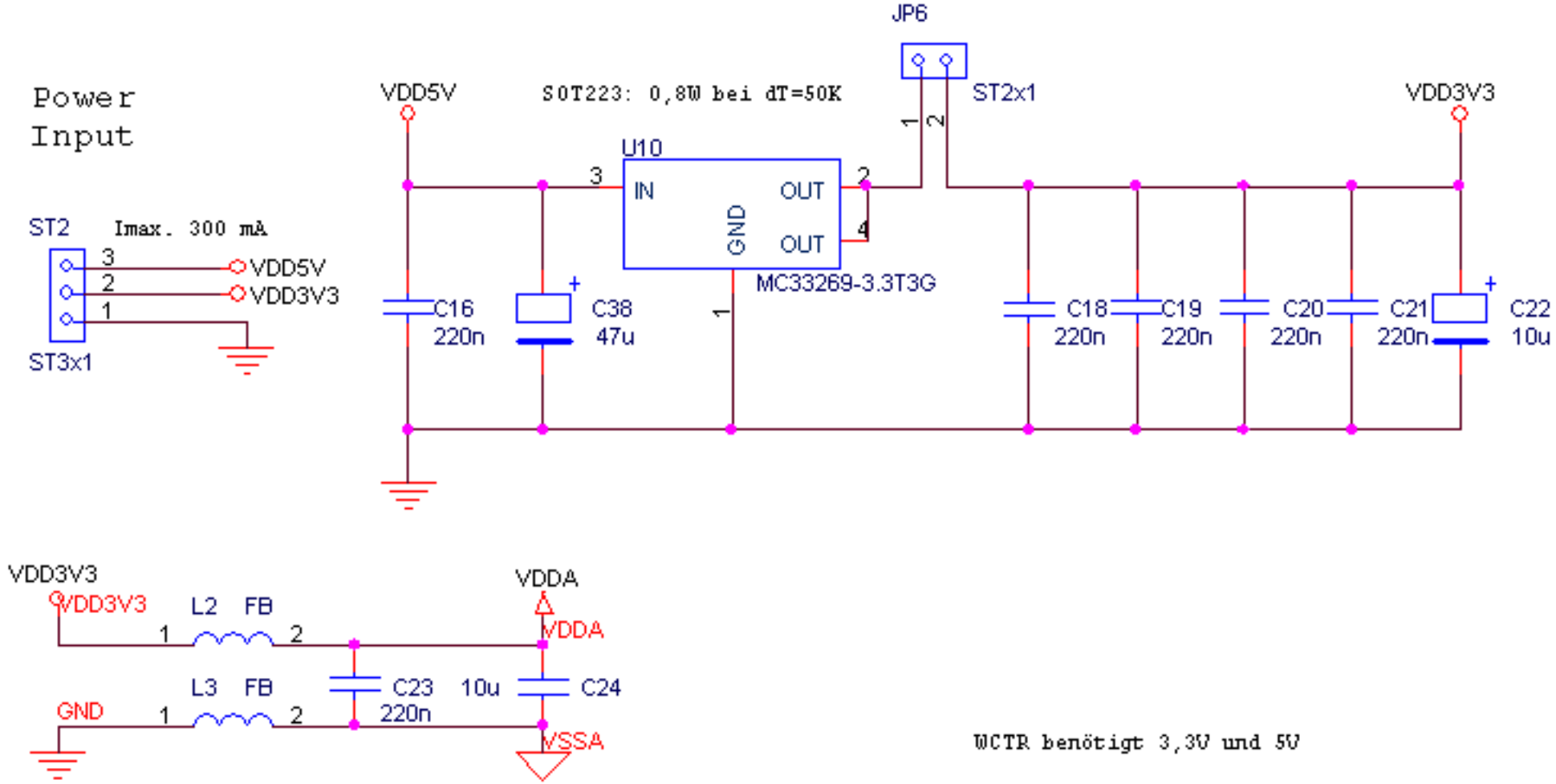

Title	Power Supply		
Size A4	Document Number WCTRv10	M6	Rev 1.0
Date: Tuesday, August 18, 2009	Sheet 7 of 10		

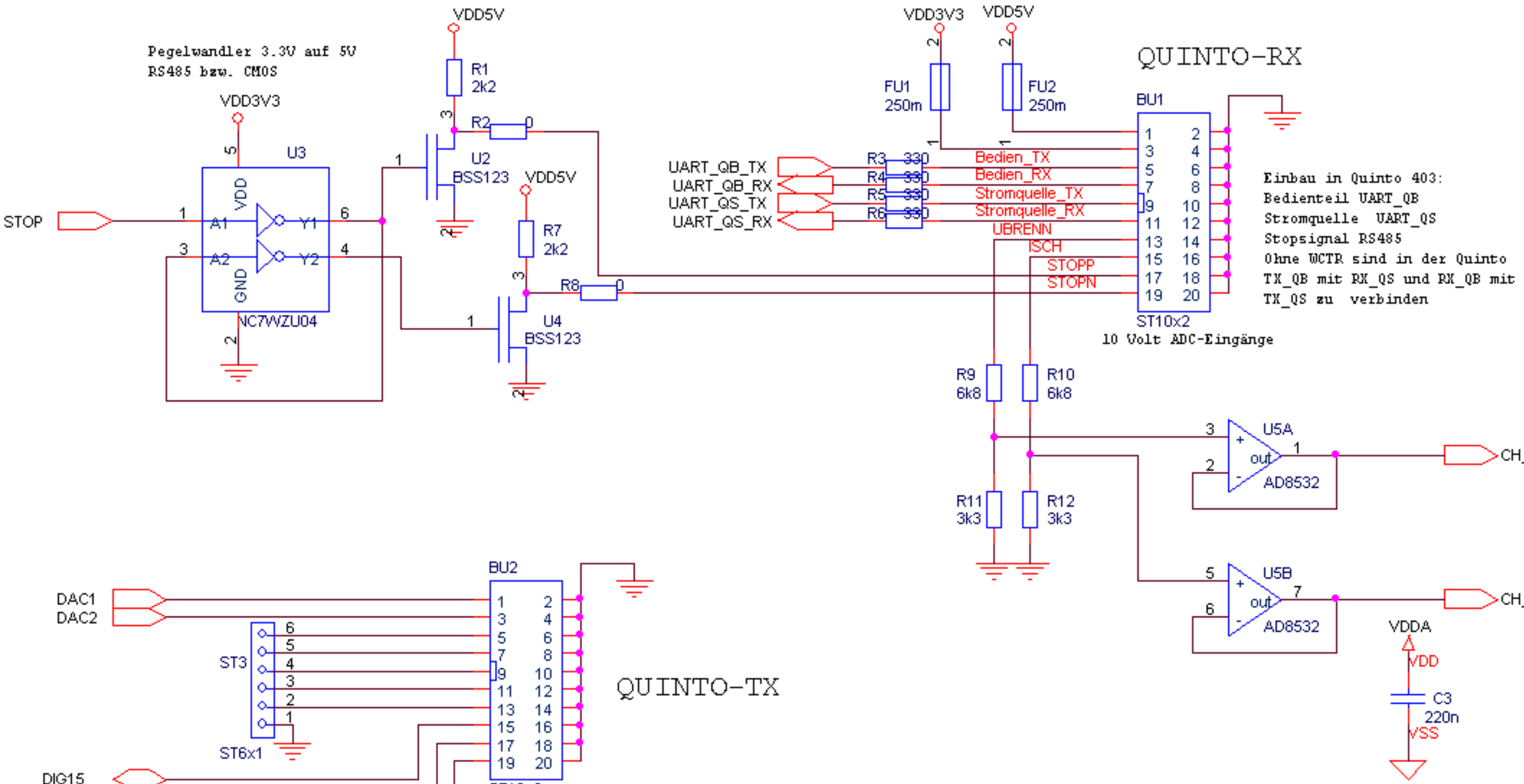

Title	QUINTO-Interfaces		
Size A4	Document Number WCTRv10	M7	Rev 1.0
Date: Tuesday, August 18, 2009	Sheet 2 of 10		

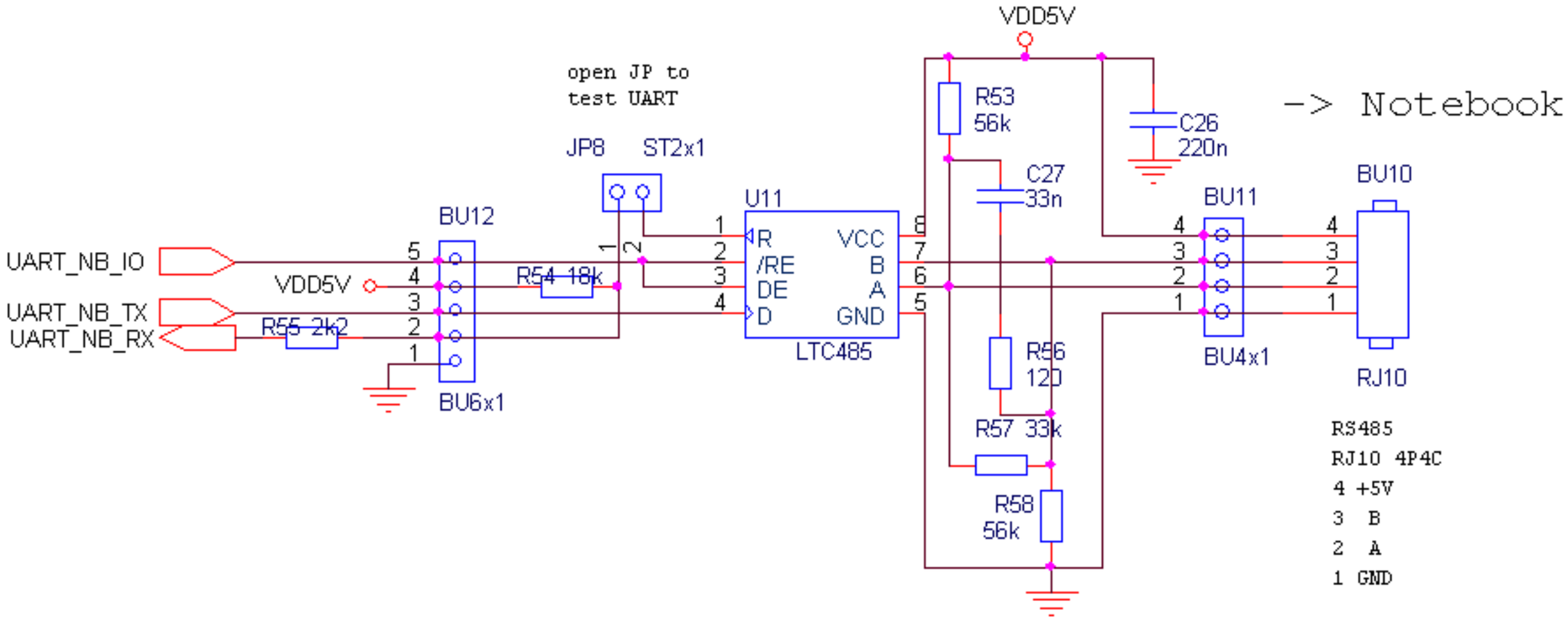

Title	Notebook-RS485-Interface	
Size A4	Document Number WCTRv10	Rev 1.0
Date: Tuesday, August 18, 2009	Sheet 10 of 10	

M8

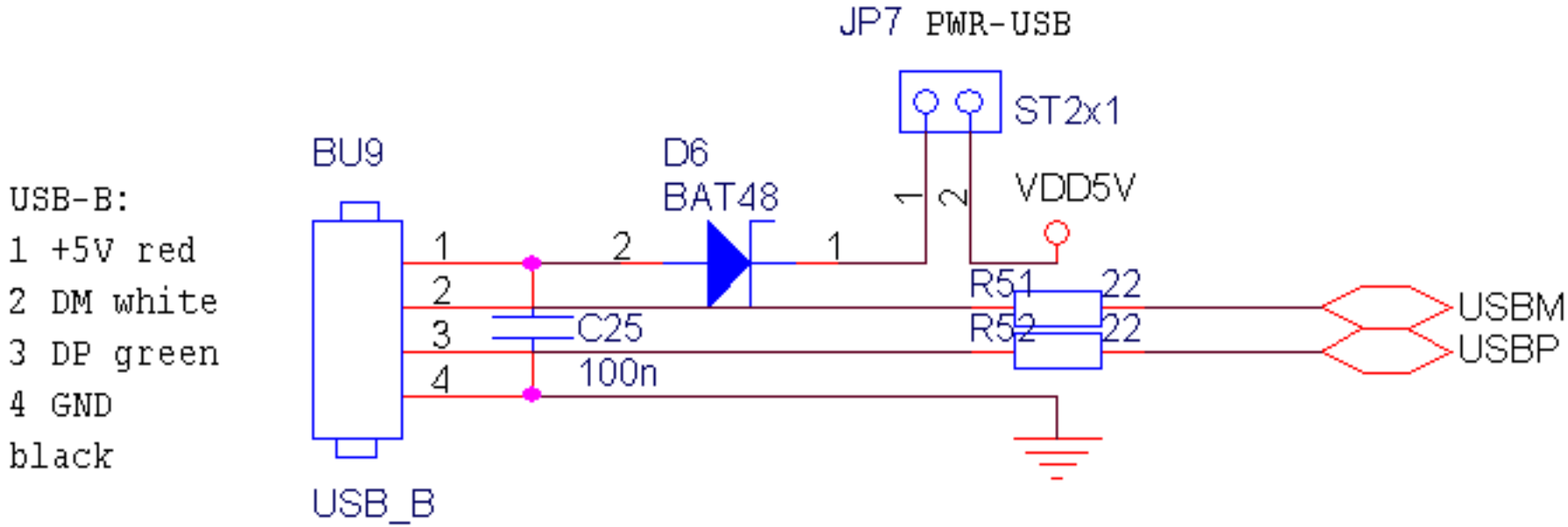

Title	USB-Interface		
Size A4	Document Number WCTRv10	M9	Rev 1.0
Date: Tuesday, August 18, 2009		Sheet 9 of 10	

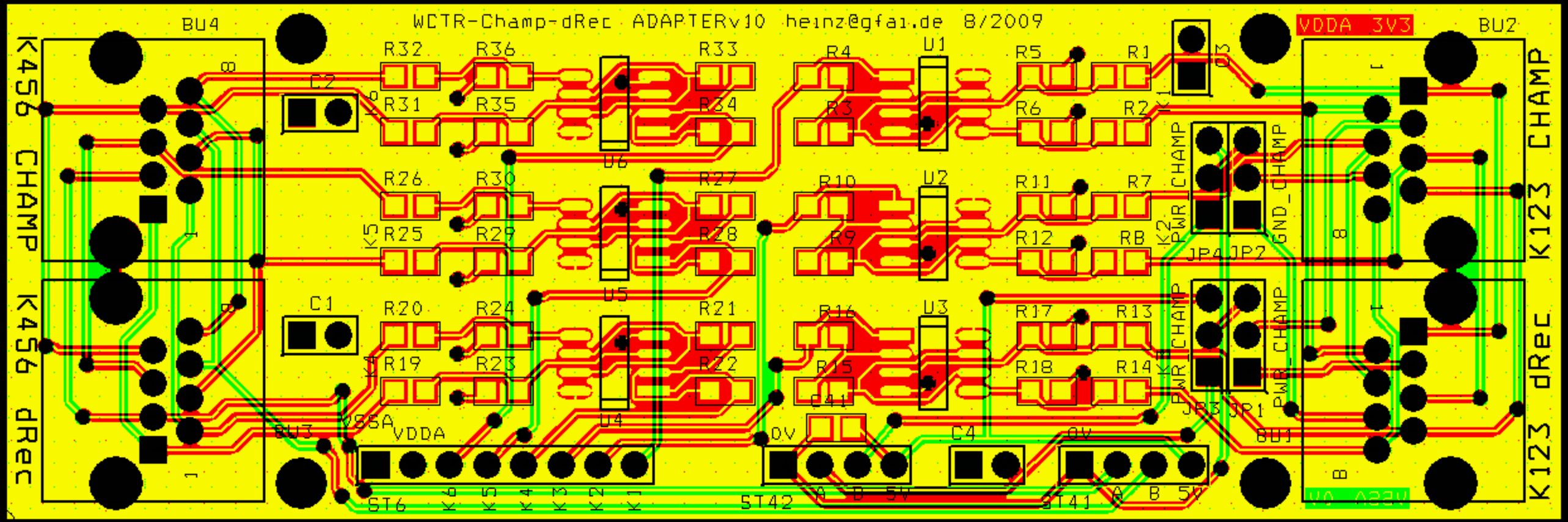
WCTR-Champ-dRec ADAPTERv10 heinz@gfai.de 8/2009
K456 CHAMP
K456 dRec
K123 CHAMP
K123 dRec
BU4
BU2
BU3
BU1
VDDA 3V3
VDDA
VSSA
0V
ST6
ST42
ST41
R32
R36
R33
R4
U1
R5
R1
R31
R35
R34
R3
R6
R2
R26
R30
R27
R10
U2
R11
R7
R25
R29
R28
R9
R12
R8
R20
R24
R21
R16
U3
R17
R13
R19
R23
R22
R15
R18
R14
C2
C1
C3
C4
C41
U6
U5
U4
K1
K2
K3
K4
K5
K6
PWR_CHAMP
GND_CHAMP
JP4
JP2
JP3
JP1
A
B
5V

Champ-Adapter für WCTR Revised: Tuesday, August 18, 2009
adapter_v10 heinz@gfai.de Revision: 1.0

Bill Of Materials August 18,2009 11:00:15 Page1

Item	Qty	Reference	Part
1	4	BU1,BU2,BU3,BU4	MOLEX43950-0007
2	5	C1,C2,C3,C4	220n stehend
3	4	JP1,JP2,JP3,JP4	ST3x1
4	12	R1,R2,R7,R8,R13,R14,R19, R20,R25,R26,R31,R32	3k3
5	12	R3,R4,R9,R10,R15,R16,R21, R22,R27,R28,R33,R34	4k7
6	12	R5,R6,R11,R12,R17,R18, R23,R24,R29,R30,R35,R36	6k8
7	1	ST6	ST8x1_90°
8	2	ST42,ST41	ST4x1_90°
9	6	U1,U2,U3,U4,U5,U6	AD8532
10	1	C41	220n SMD

JP1 PWR_CHAMP (+5V):
1-2: Power from dRec
2-3: Power from WCTR
JP3 2-3

JP3 GND_CHAMP (0V):
1-2: GND from dRec
2-3: GND from WCTR
JP4 2-3

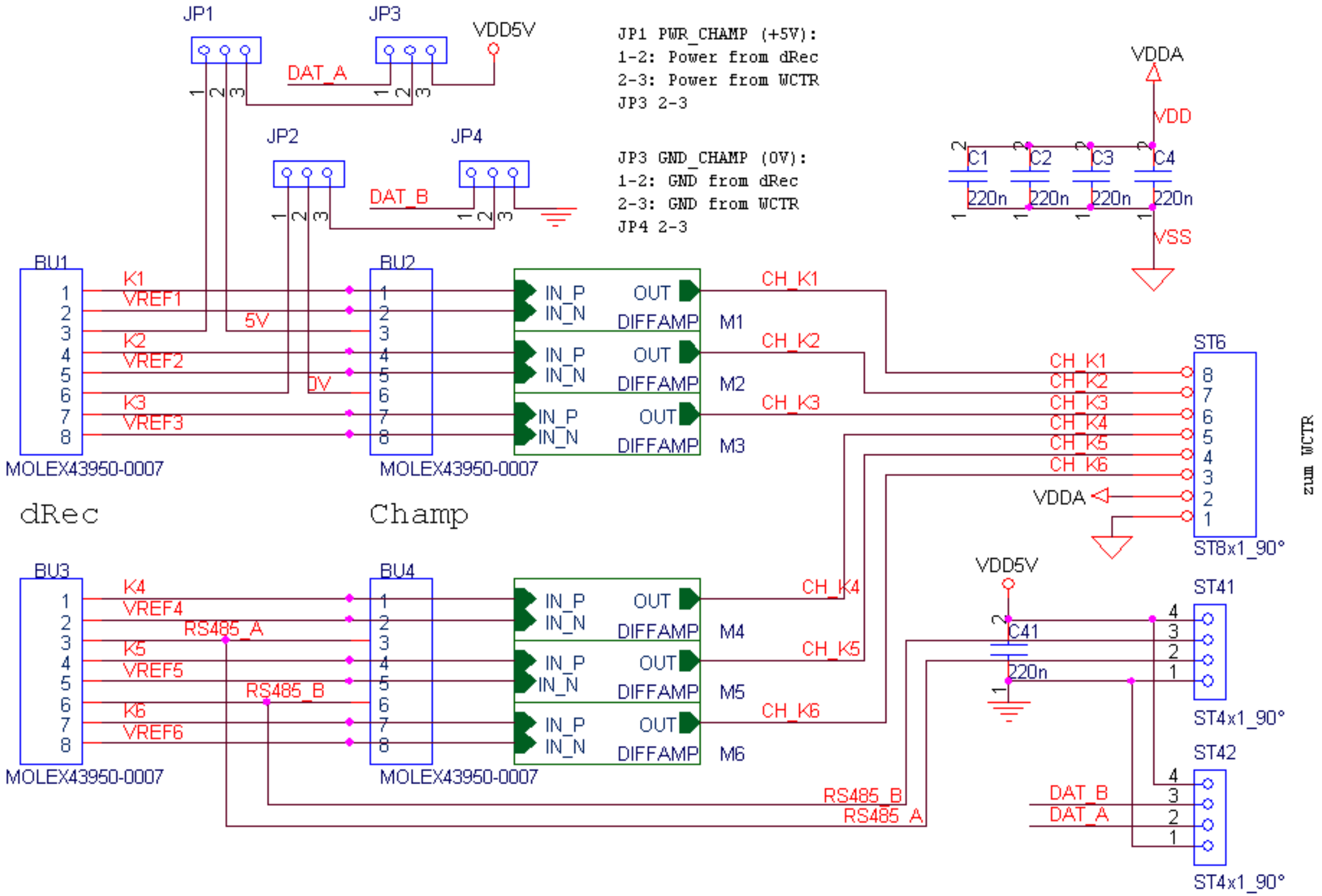

5V-Eingänge
3V3 Ausgänge zum WCTR

Title	Champ-Adapter für WCTR	
Size A4	Document Number WCTR-A heinz@gfai.de	Rev 1.0
Date: Tuesday, August 18, 2009	Sheet 1 of 7	

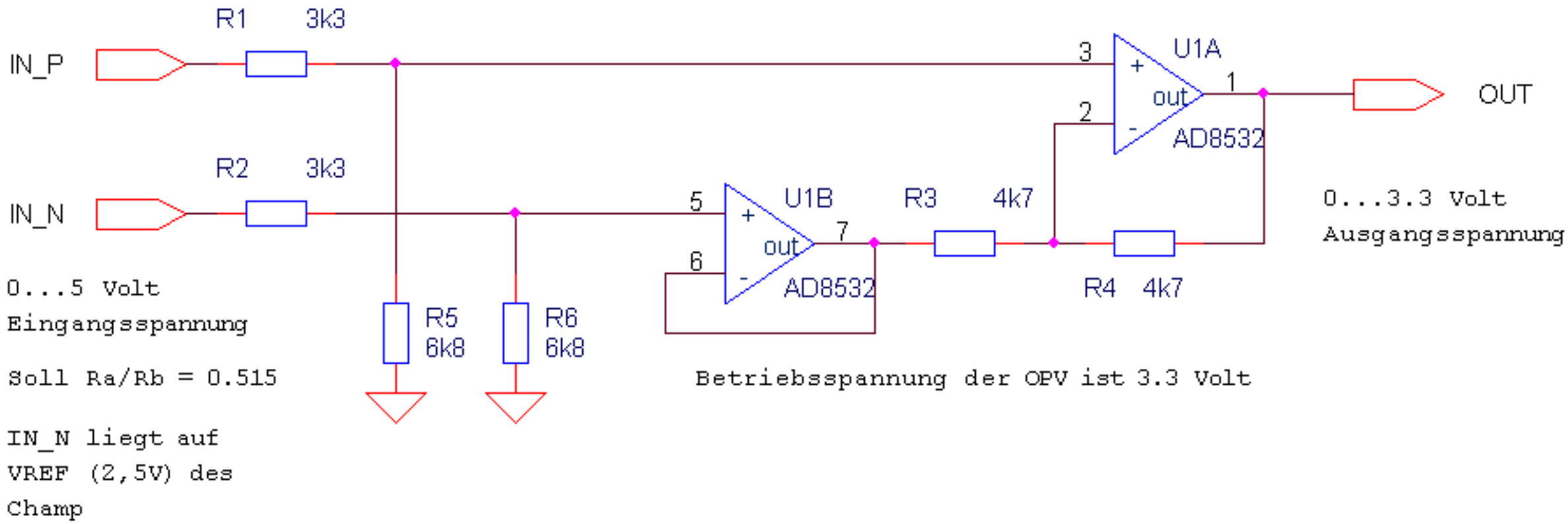

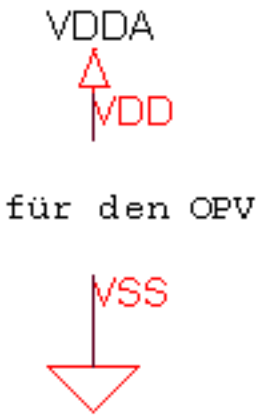

Title	Differenzverstärker DIFFAMP	
Size A4	Document Number WCTR heinz@gfai.de	Rev 1.0
Date: Monday, August 17, 2009	Sheet 2 of 7	